Doc. N.° 1SDH000721R0505 - ECN000084121 - Rev. B

SACE Tmax XT

1SDH000721R0505

Montaggio sganciatori XT2-XT4
Release assembly XT2-XT4
Auslöser Montage XT2-XT4
Assemblage Dèclencheur XT2-XT4
Montaje Relé XT2-XT4
XT2-XT4 脱扣器的安装

XT2-XT4/III-IV

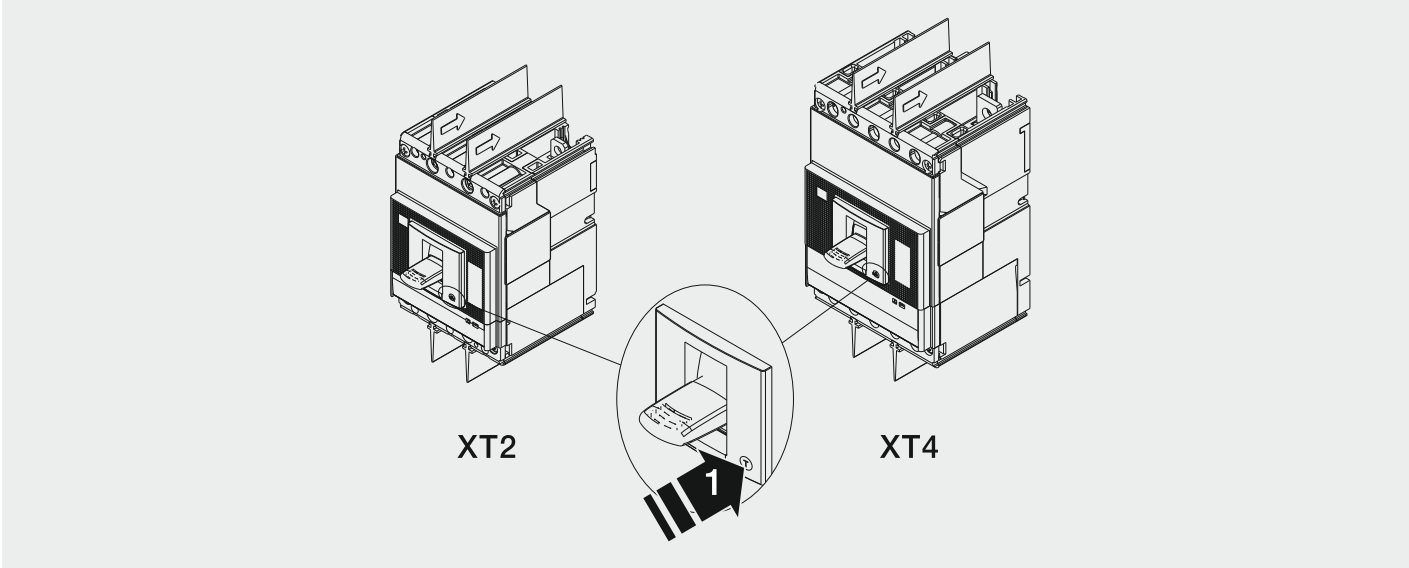

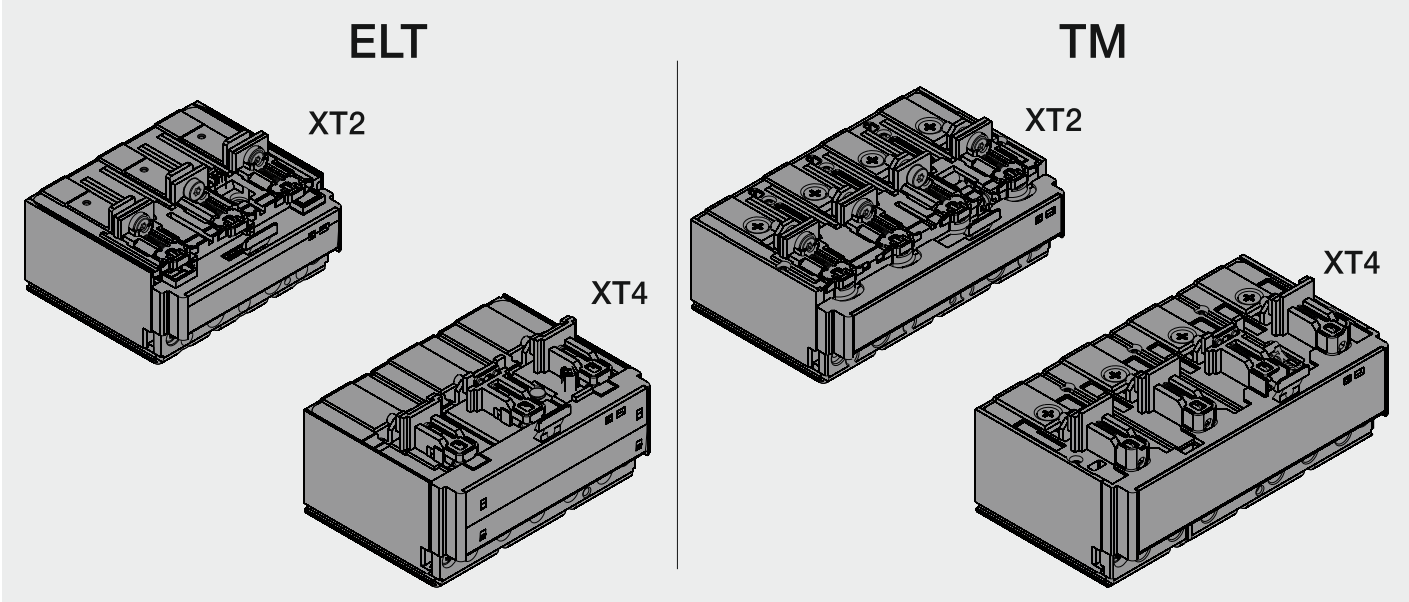

* fold this paper with barcode on the outer side

1 ONLY FOR XT2 F- XT4 F

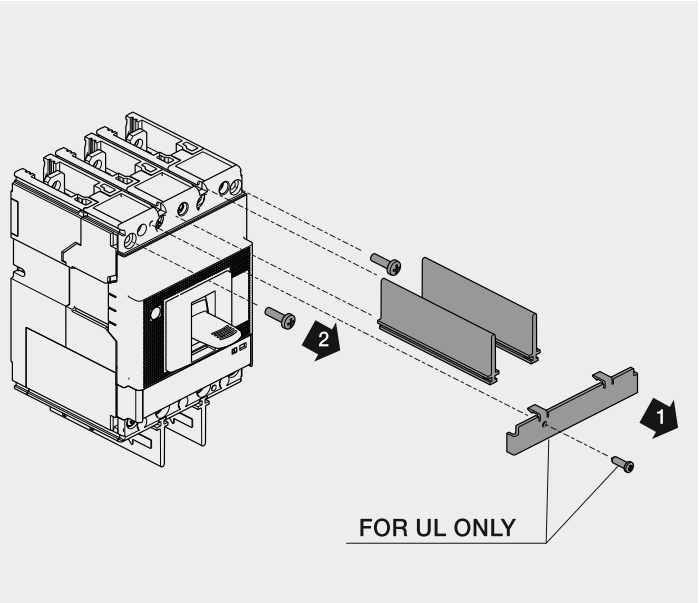

2 FOR XT4 V-X ONLY

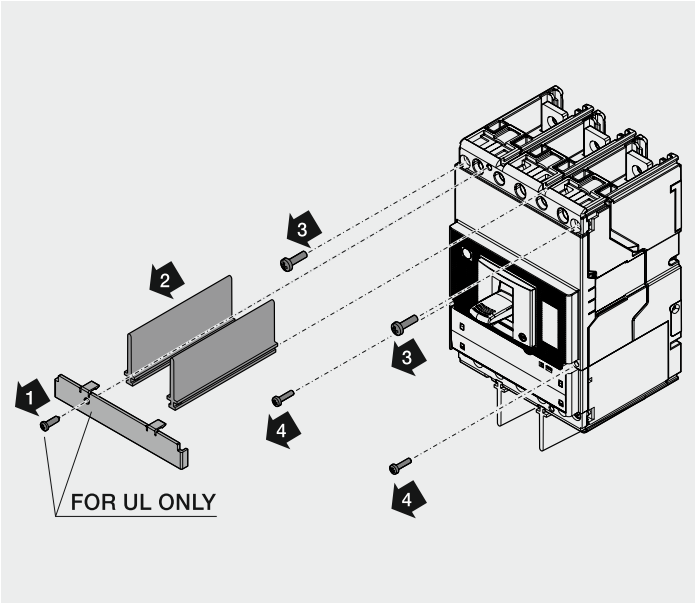

3 ONLY FOR XT2 F/P - XT4 F/P

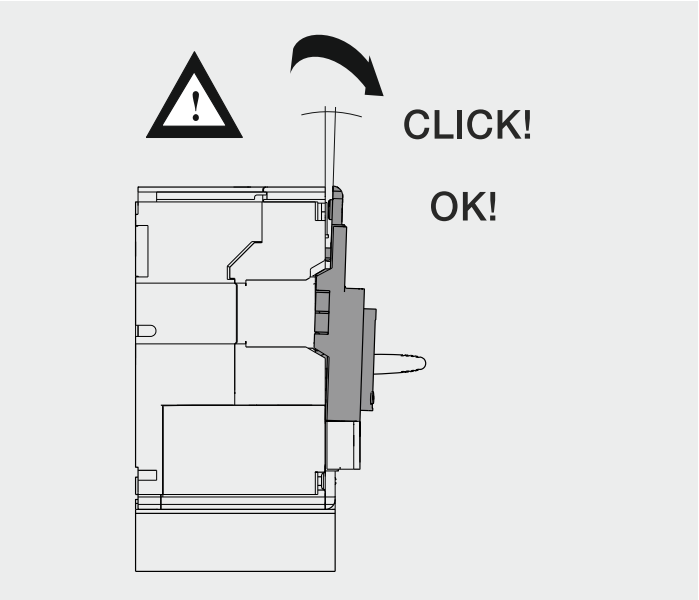

4 ONLY FOR XT2 F/P - XT4 F/P

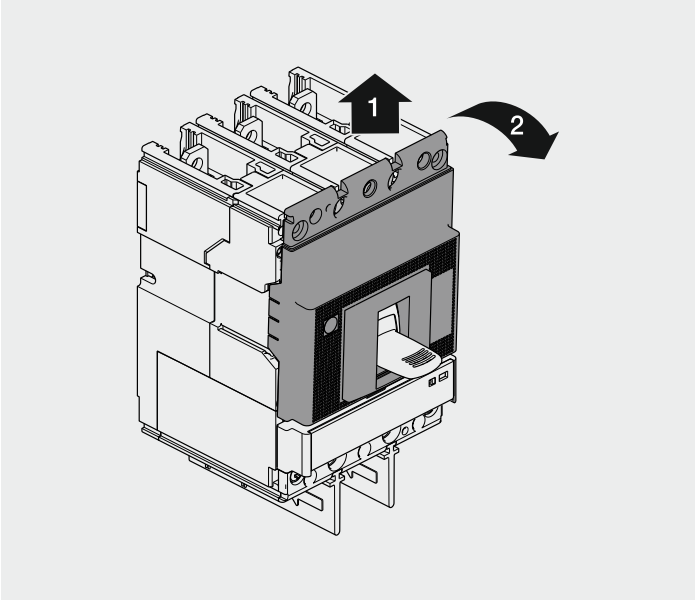

5

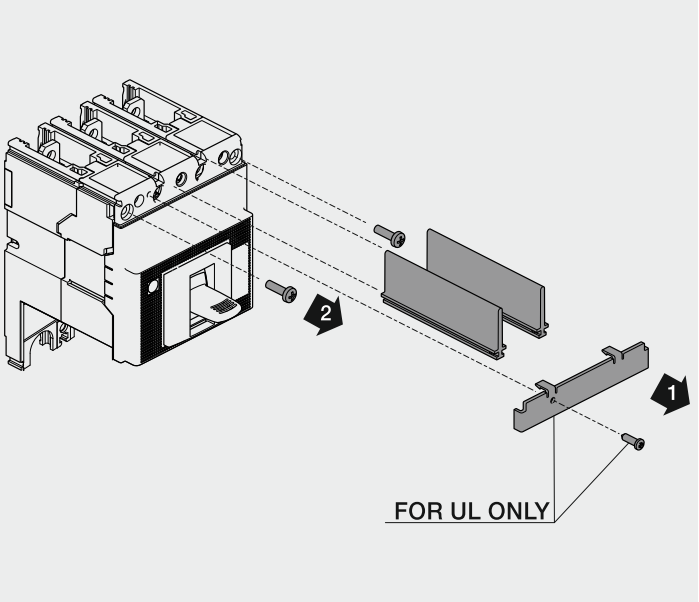

6 FOR XT4 V-X ONLY

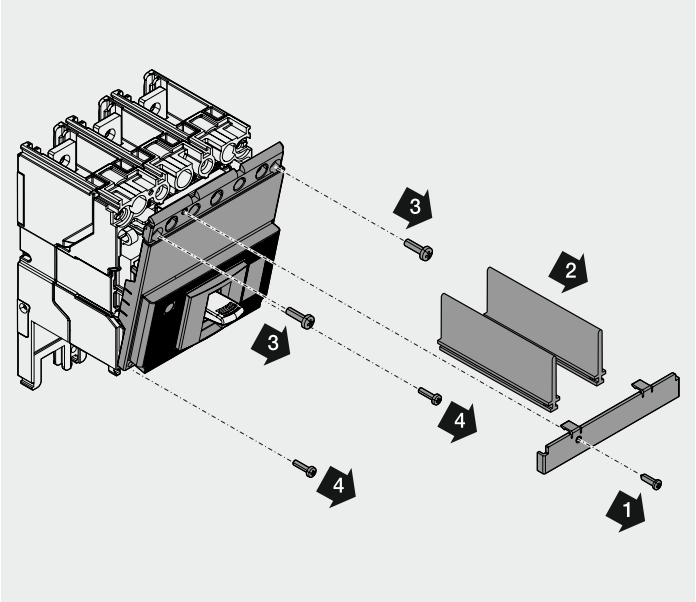

7

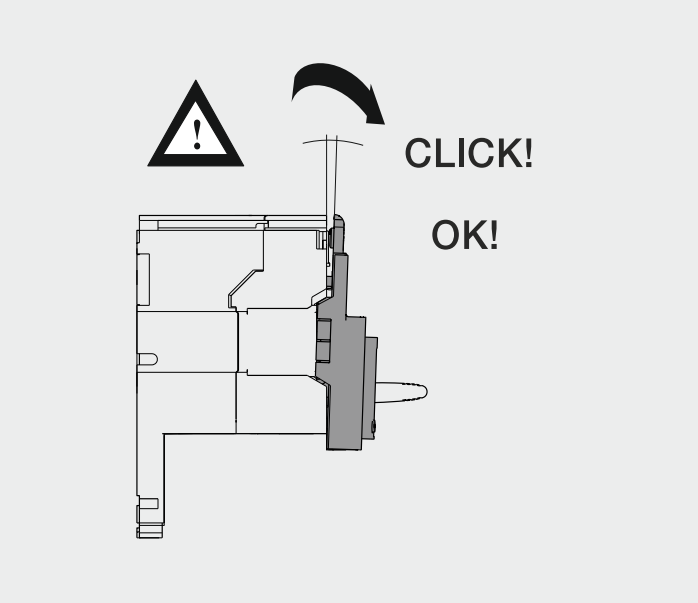

8

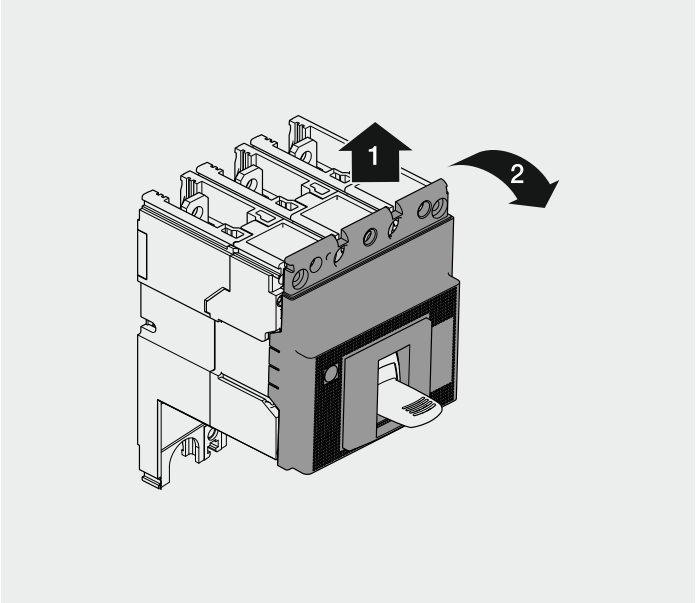

9 XT2-XT4

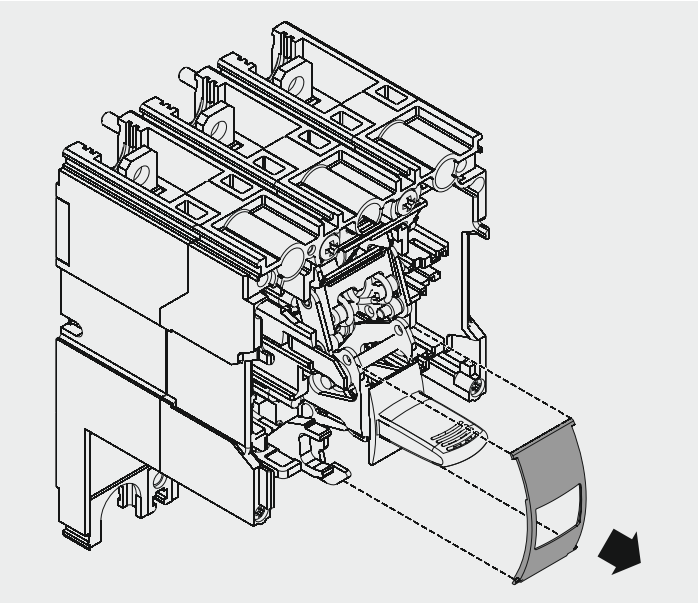

10 XT2-XT4

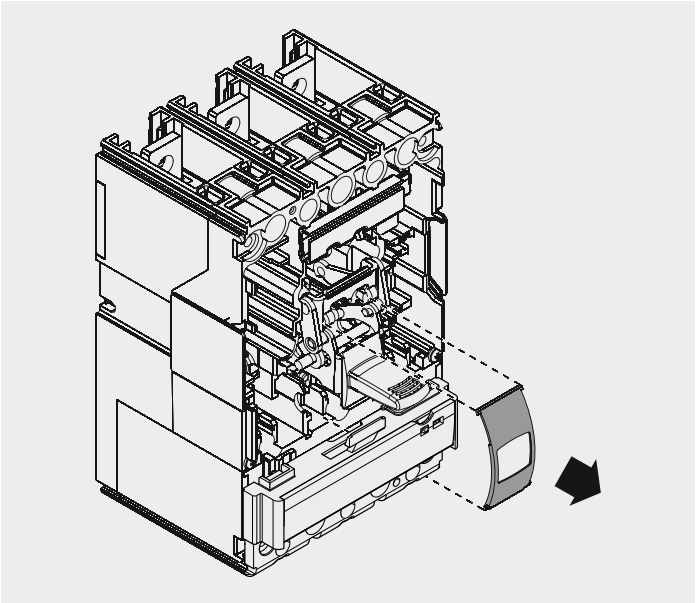

11 XT2-XT4

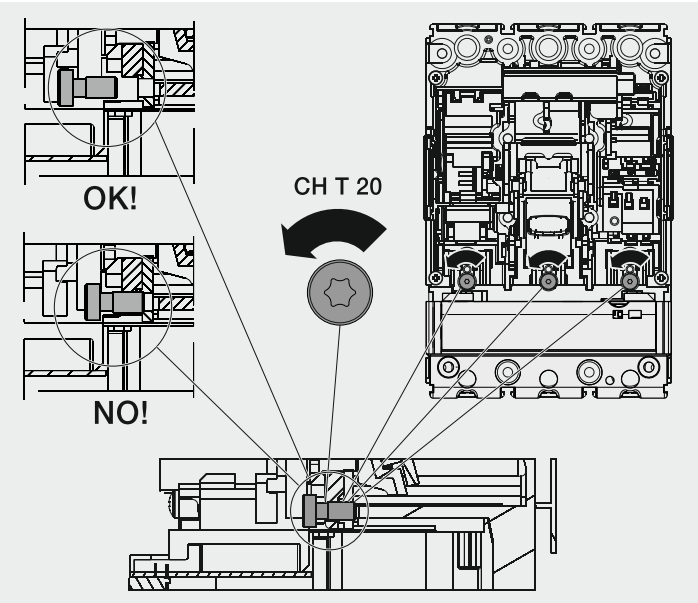

12 XT2-XT4

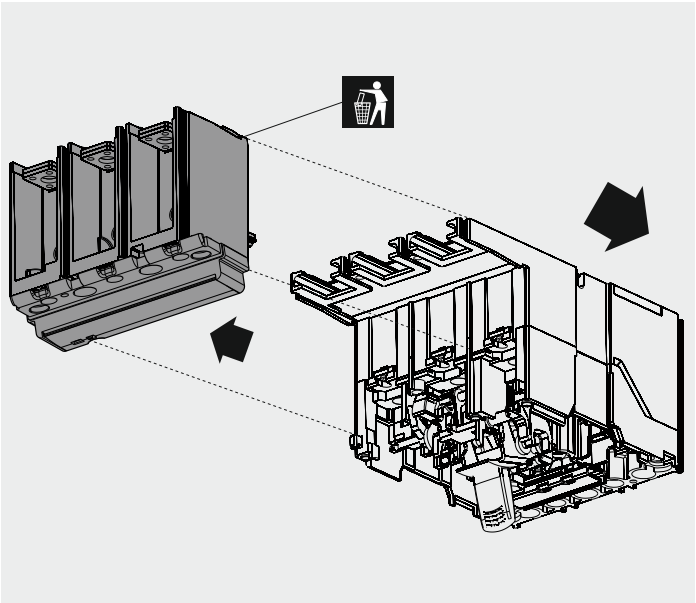

13 XT2

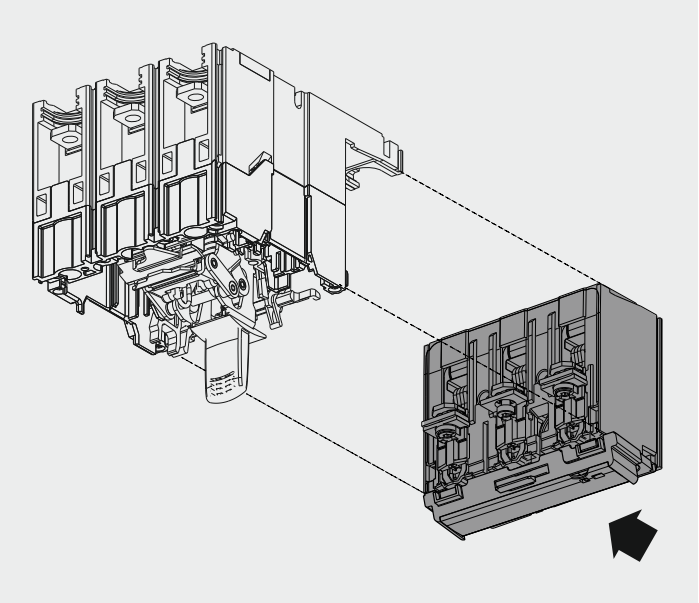

14 XT2

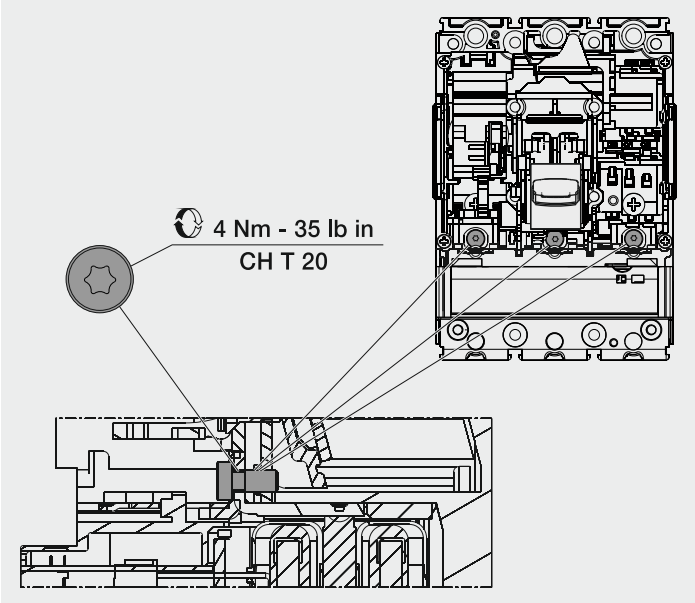

15 XT2

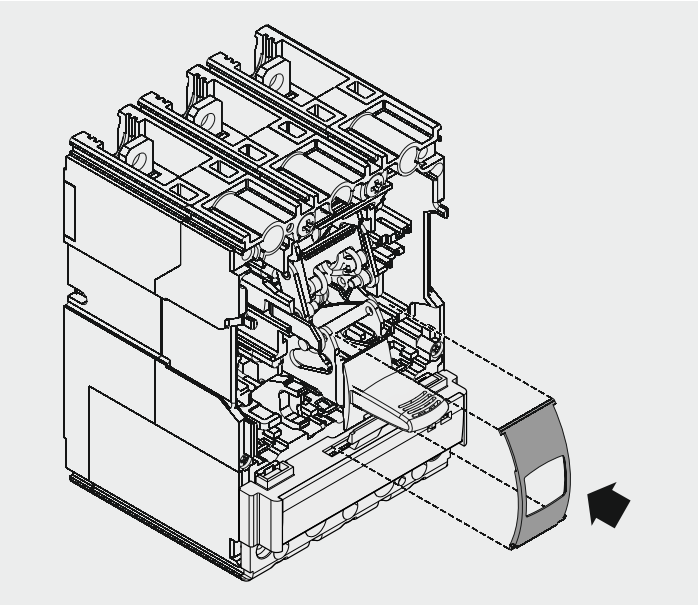

16 XT4

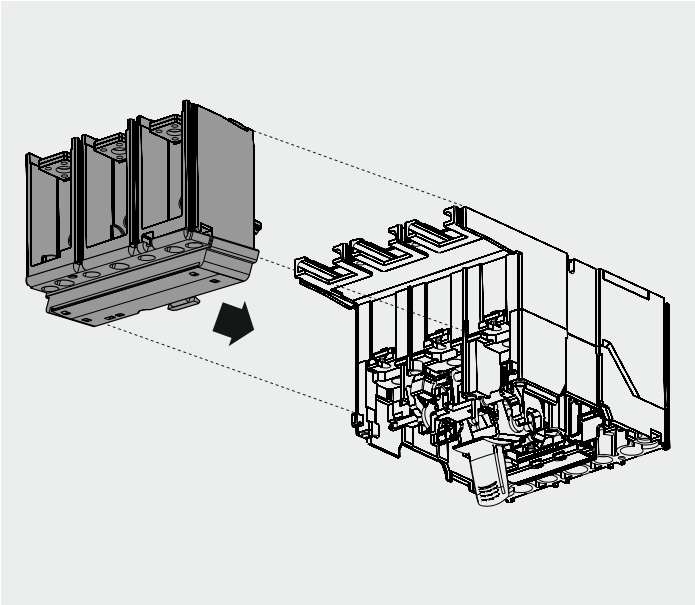

17 XT4

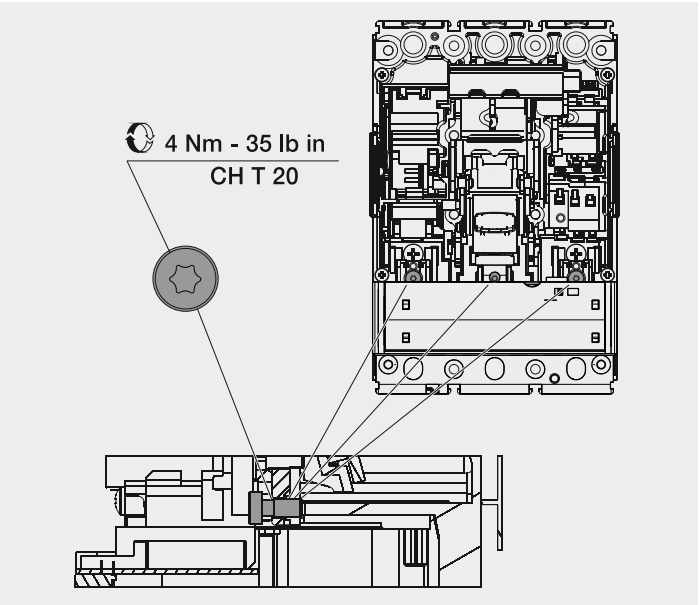

18 XT4

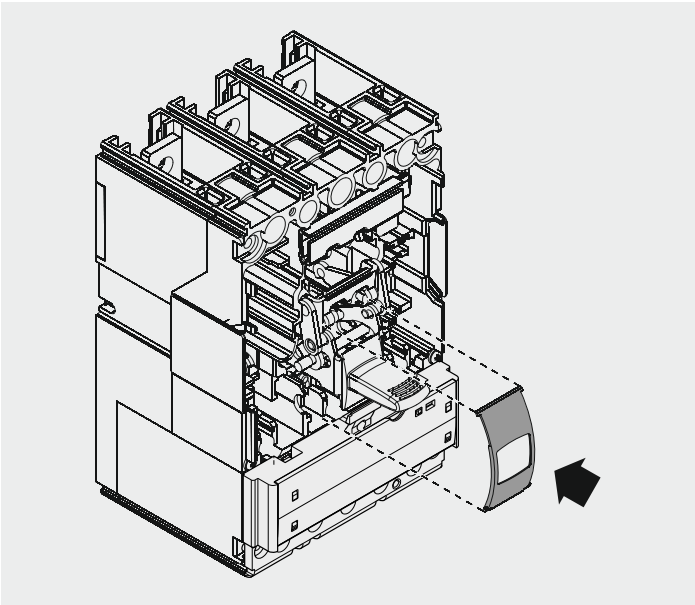

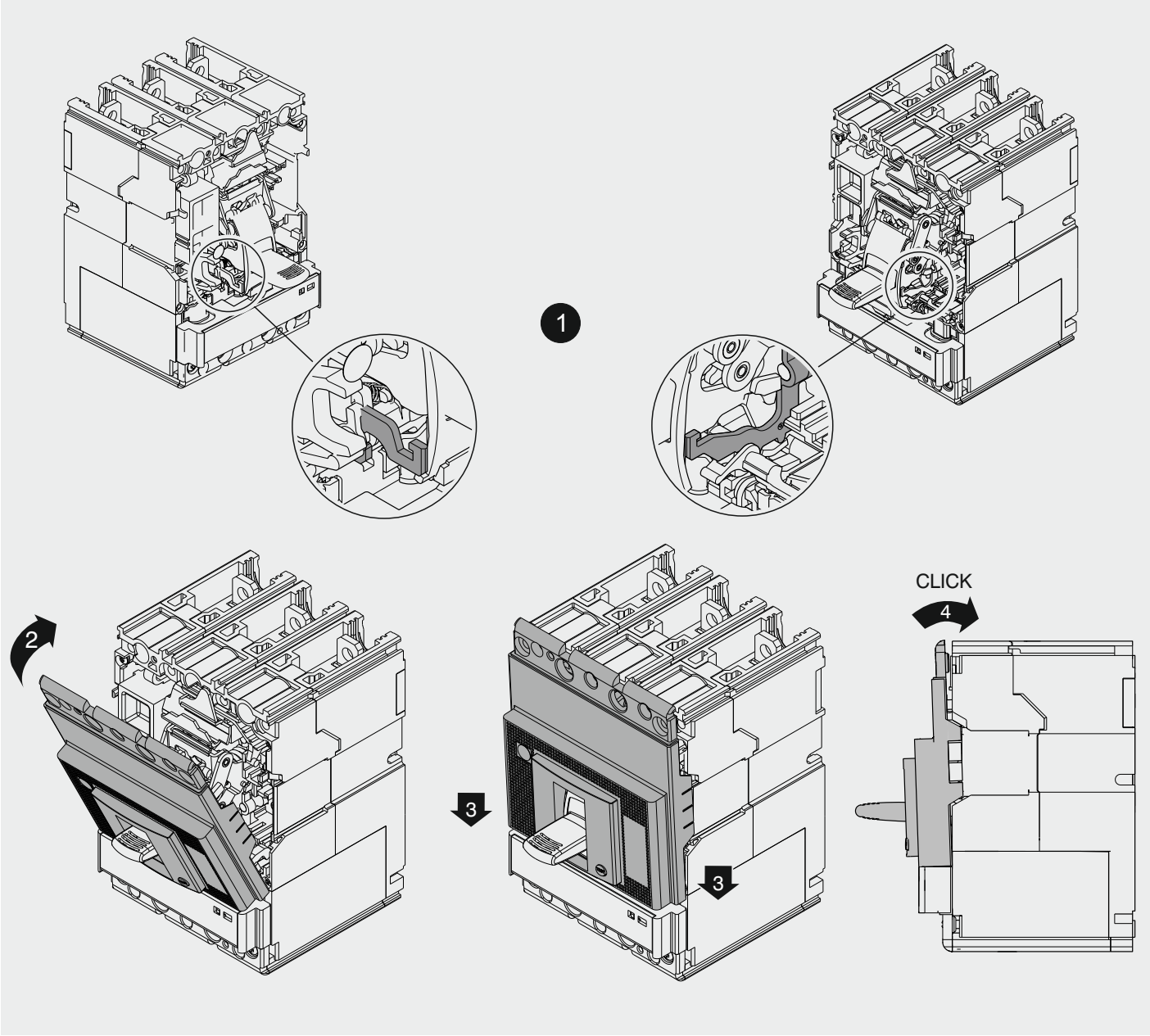
1
2
3
3
CLICK
4

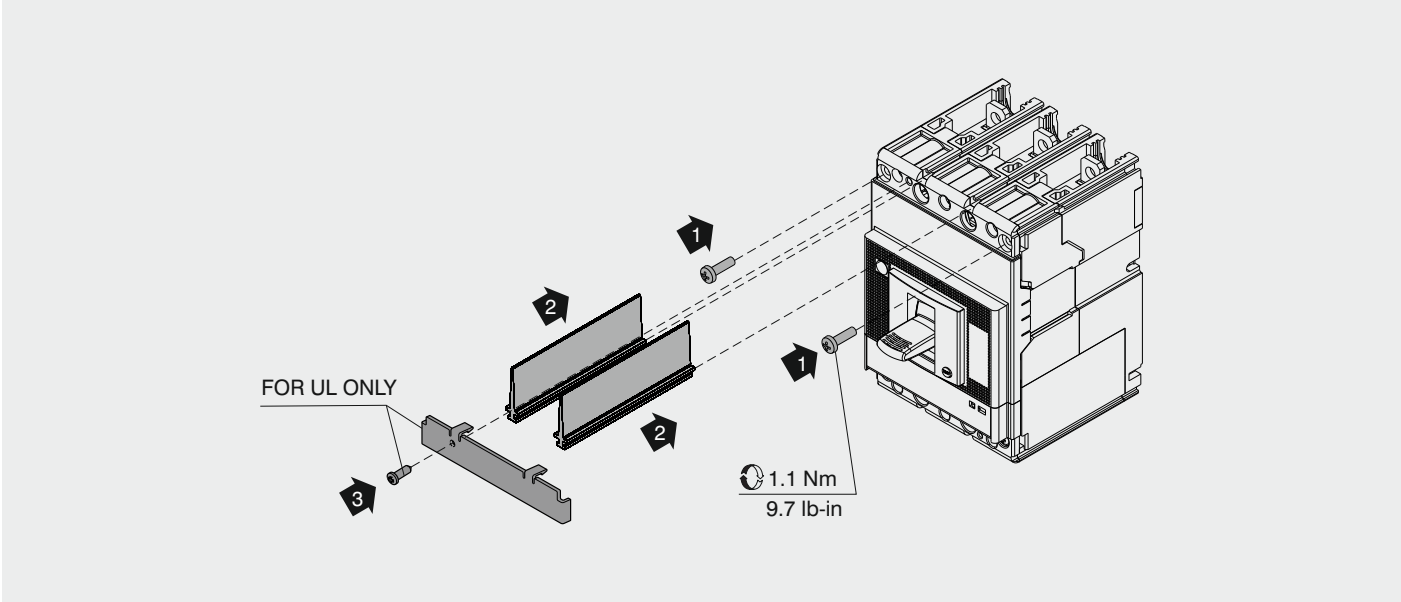
1
2
1
FOR UL ONLY
2
3
1.1 Nm
9.7 lb-in

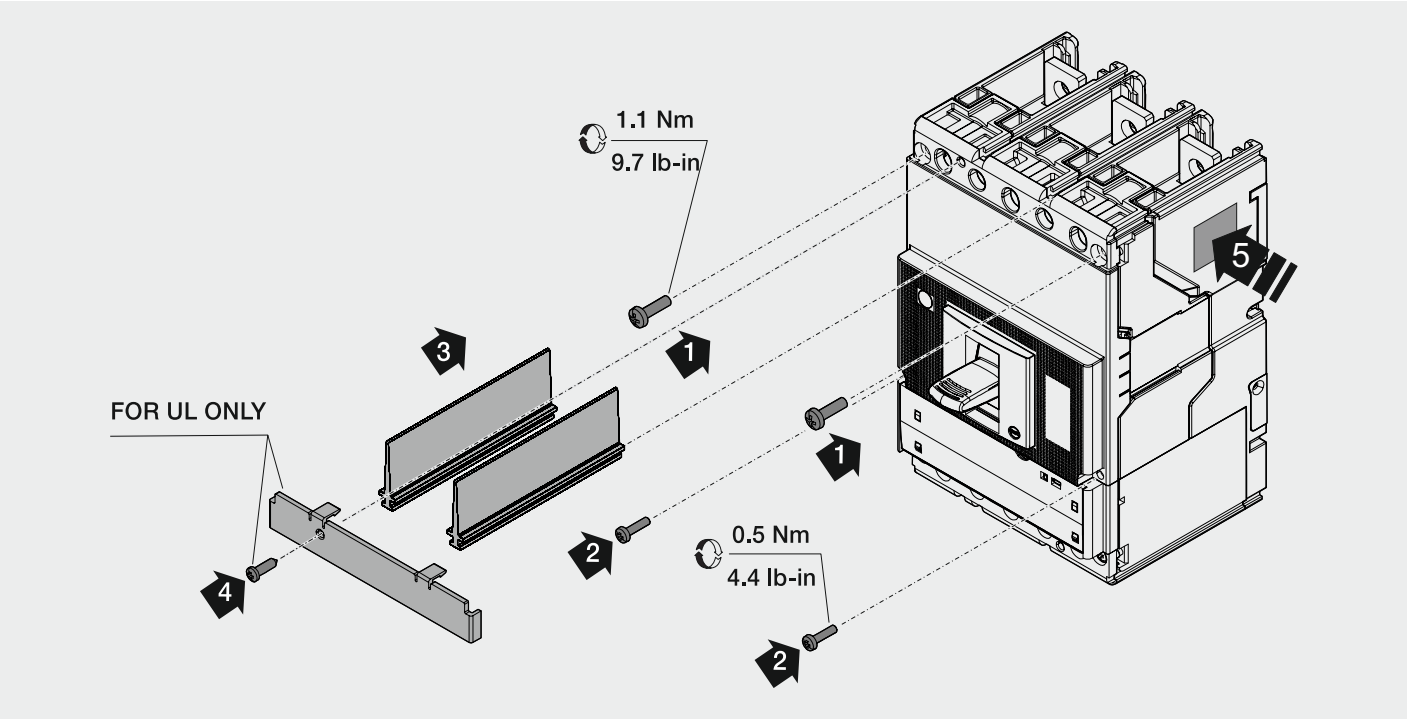

© Copyright 2010-2018 ABB. All rights reserved.